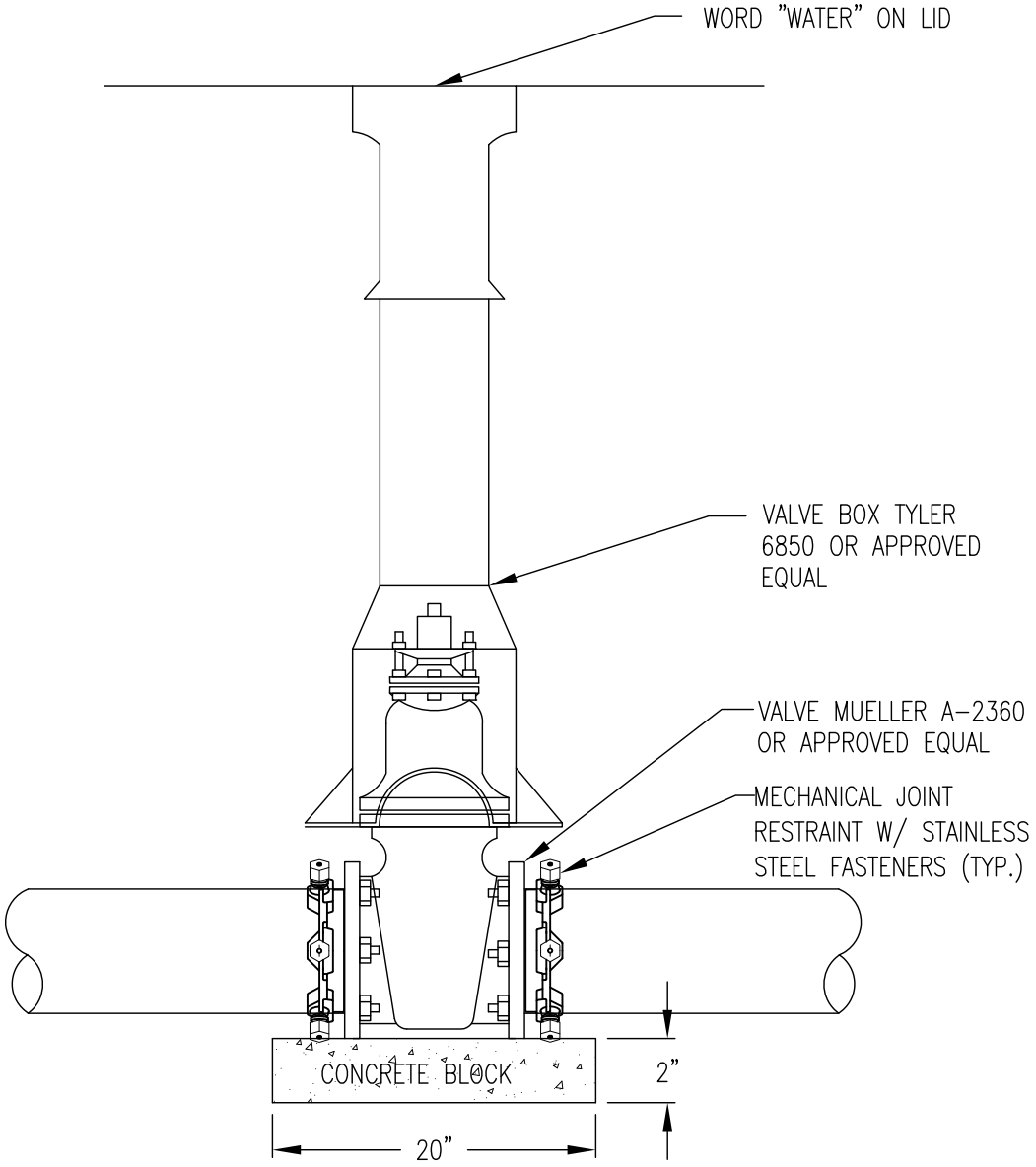


STETSON ENGINEERING, INC.
P.O. BOX 457
601 METZ DRIVE
GILLETTE, WY 82717
(307) 682-8936

WRIGHT WATER & SEWER DISTRICT
WATERMAIN VALVE DETAIL

\\Fserver\CAD\2007\07-075 WWSD\dwg\STD DWGS.dwg, WATERMAIN VALVE DETAIL, 10/28/2009 11:22:15 AM